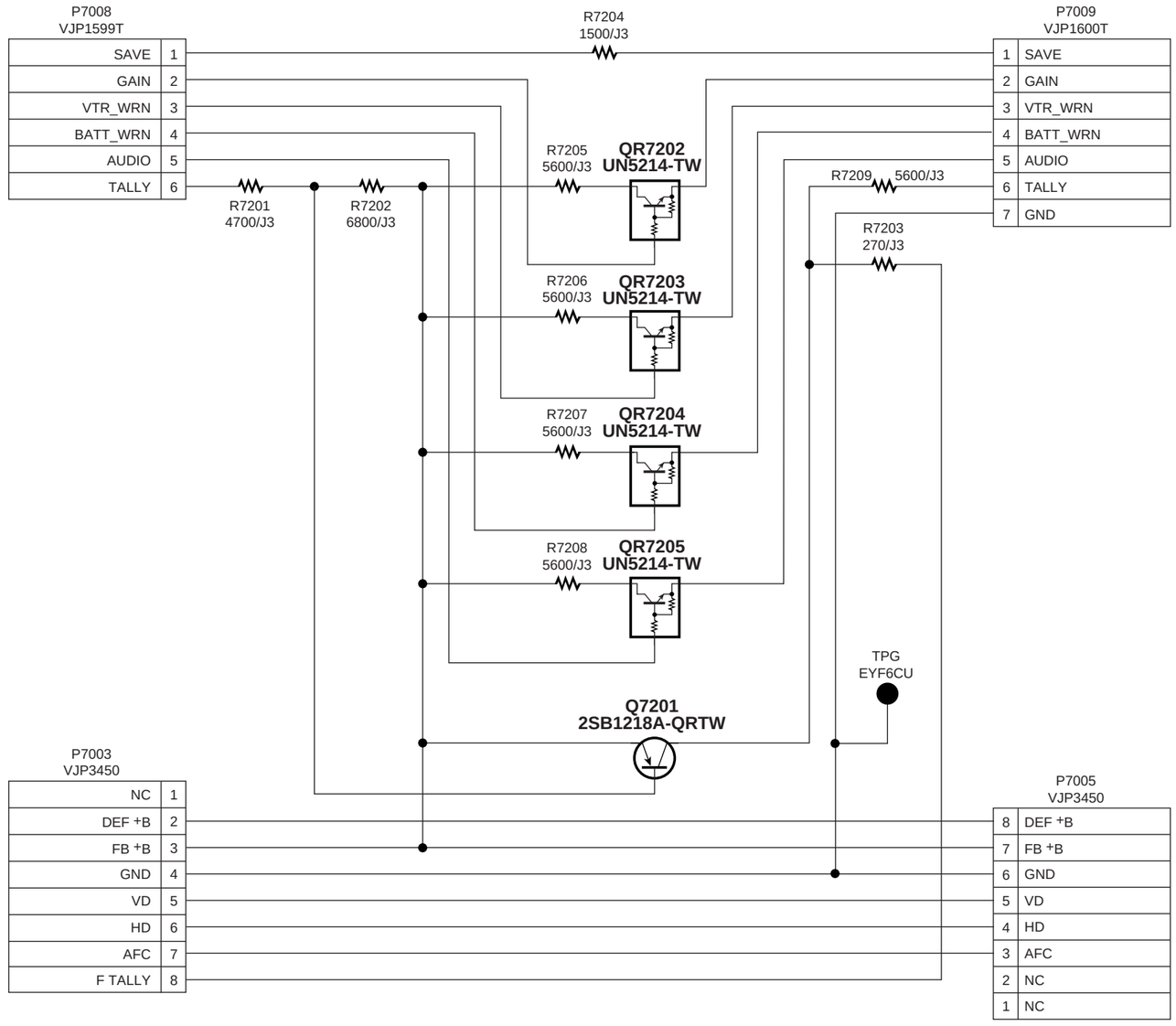


| COMPONENT NAME | CN | 01/01 |
|---|---|---|
| CIRCUIT BOARD NO. | MODEL NO. | |
| VEP27088A | AJ-D215T/P/HE | |
| | | SCM059 |